```
1   PROGRAM PLC_PRG
2   VAR
3       //Inputs
4       StartPB , StopPB , EstopPB : BOOL ;
5
6       S_Low , S_Mid , S_High : BOOL ;
7
8       S_P1 , S_P2 : BOOL ;
9
10      P1_Extended , P1_Retracted : BOOL ;
11      P2_Extended , P2_Retracted : BOOL ;
12
13      //Outputs
14      ConveyorMotor1 , ConveyorMotor2 : BOOL ;
15      Siren , Alarm : BOOL ;
16      P1_On : BOOL ;
17      P2_On : BOOL ;
18
19      // Internaal Memory(States)
20      RunLatch : BOOL ;
21      P1_Active , P2_Active : BOOL ;
22
23      ///Class Flag
24      Small_Flag , Medium_Flag : BOOL ;
25
26      // Edges
27      R_Class : R_TRIG ;
28      R_P1 : R_TRIG ;
29      R_P2 : R_TRIG ;
30
31      // Times
32      T_StartBTN : TON ;
33      T_StartBTN_ET : TIME ;
34
35      TP_StartBTN : TP ;
36      TP_StartBTN_ET : TIME ;
37
38      T_P1 : TON ;
39      T_P1_ET : TIME ;
40
41      T_P2 : TON ;
42      T_P2_ET : TIME ;
43
44      // Counters
45      Cnt_Small : CTU ;
46      Cnt_Medium : CTU ;
47      Cnt_Large : CTU ;
48
49      Small_Count : INT ;
50      Medium_Count : INT ;
51      Large_Count : INT ;
52
```

```
53          // Faults
54          Fault :  BOOL ;
55          ResetPB :  BOOL ;
56          P1_Fault ,  P2_Fault  :  BOOL ;
57
58          //Timeout Timer
59          T_P1_Timeout  :  TON ;
60          T_P2_Timeout  :  TON ;
61
62          T_P1_Timeout_ET :  TIME ;
63          T_P2_Timeout_ET :  TIME ;
64
65      END_VAR
66
```

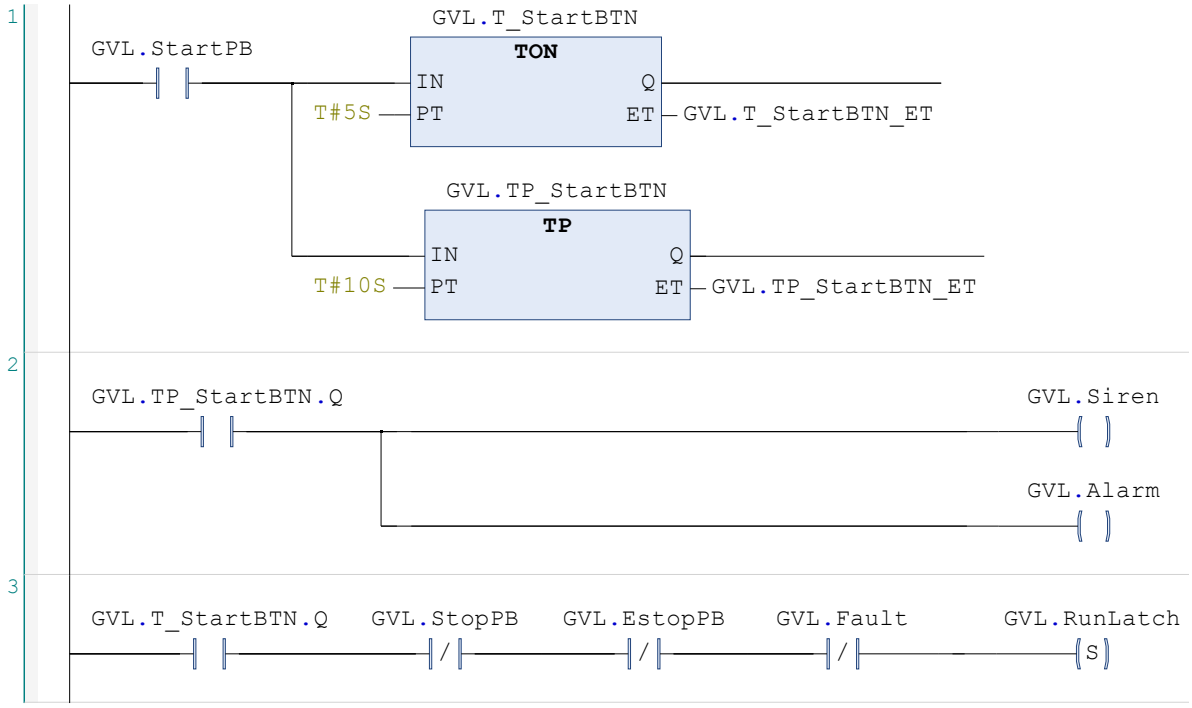

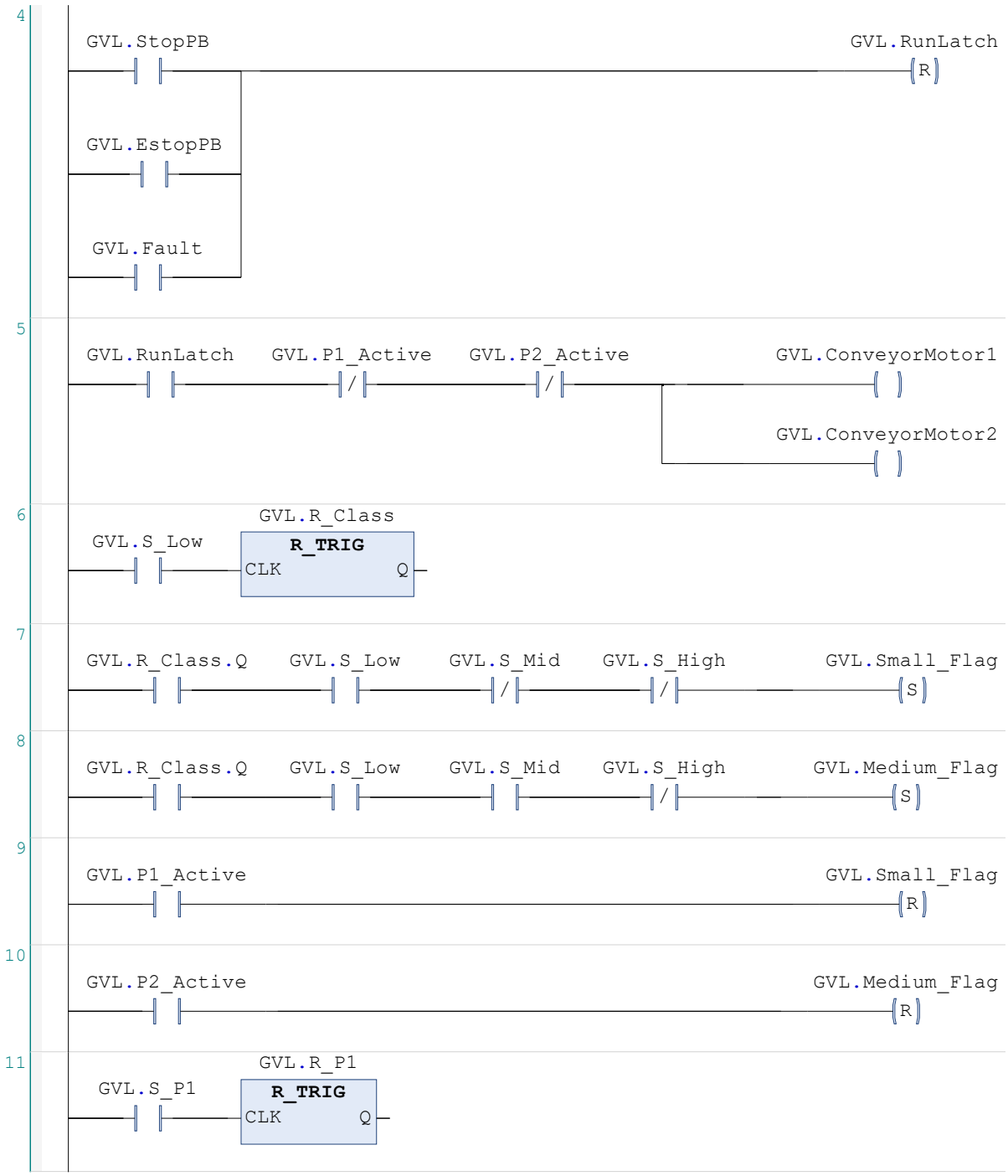
4
GVL.StopPB
GVL.RunLatch
R
GVL.EstopPB
GVL.Fault
5
GVL.RunLatch
GVL.P1_Active
GVL.P2_Active
GVL.ConveyorMotor1
GVL.ConveyorMotor2
6
GVL.R_Class
GVL.S_Low
R_TRIG
CLK
Q
7
GVL.R_Class.Q
GVL.S_Low
GVL.S_Mid
GVL.S_High
GVL.Small_Flag
S
8
GVL.R_Class.Q
GVL.S_Low
GVL.S_Mid
GVL.S_High
GVL.Medium_Flag
S
9
GVL.P1_Active
GVL.Small_Flag
R
10
GVL.P2_Active
GVL.Medium_Flag
R
11
GVL.R_P1
GVL.S_P1
R_TRIG
CLK
Q

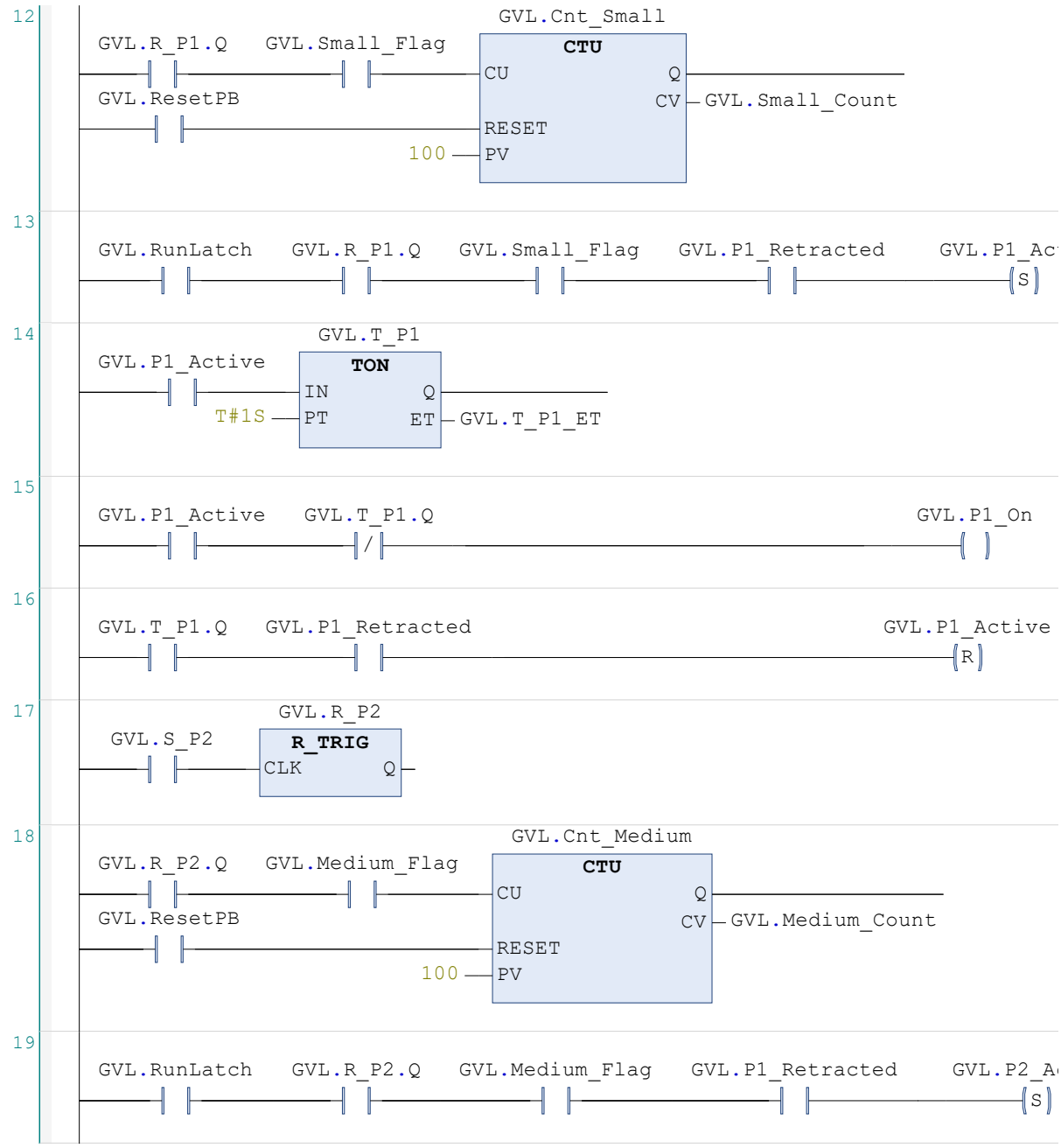
12
GVL.Cnt_Small
GVL.R_P1.Q
GVL.Small_Flag
CTU
CU
Q
GVL.ResetPB
CV
GVL.Small_Count
RESET
100
PV
13
GVL.RunLatch
GVL.R_P1.Q
GVL.Small_Flag
GVL.P1_Retracted
S
14
GVL.T_P1
GVL.P1_Active
TON
IN
Q
T#1S
PT
ET
GVL.T_P1_ET
15
GVL.P1_Active
GVL.T_P1.Q
GVL.P1_On
16
GVL.T_P1.Q
GVL.P1_Retracted
GVL.P1_Active
R
17
GVL.R_P2
GVL.S_P2
R_TRIG
CLK
Q
18
GVL.Cnt_Medium
GVL.R_P2.Q
GVL.Medium_Flag
CTU
CU
Q
GVL.ResetPB
CV
GVL.Medium_Count
RESET
100
PV
19
GVL.RunLatch
GVL.R_P2.Q
GVL.Medium_Flag
GVL.P1_Retracted
S

tive

ctive

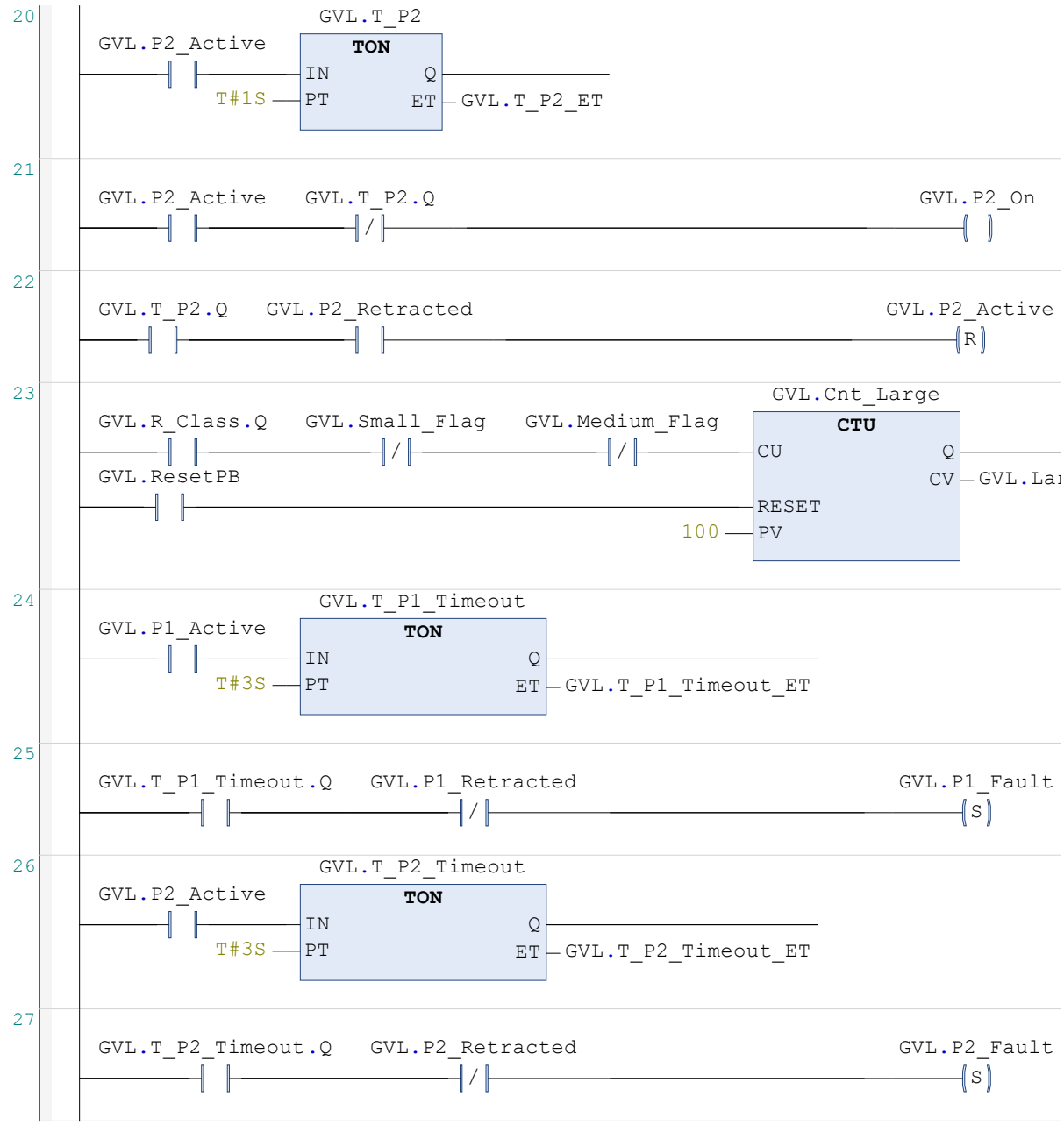
20
GVL.T_P2
GVL.P2_Active
TON
IN
Q
T#1S
PT
ET
GVL.T_P2_ET
21
GVL.P2_Active
GVL.T_P2.Q
GVL.P2_On
22
GVL.T_P2.Q
GVL.P2_Retracted
GVL.P2_Active
R
23
GVL.Cnt_Large
GVL.R_Class.Q
GVL.Small_Flag
GVL.Medium_Flag
CTU
CU
Q
GVL.ResetPB
CV
GVL.Lar
RESET
100
PV
24
GVL.T_P1_Timeout
GVL.P1_Active
TON
IN
Q
T#3S
PT
ET
GVL.T_P1_Timeout_ET
25
GVL.T_P1_Timeout.Q
GVL.P1_Retracted
GVL.P1_Fault
S
26
GVL.T_P2_Timeout
GVL.P2_Active
TON
IN
Q
T#3S
PT
ET
GVL.T_P2_Timeout_ET
27
GVL.T_P2_Timeout.Q
GVL.P2_Retracted
GVL.P2_Fault
S

rge_Count

28
GVL.P1_Fault
GVL.Fault
S
GVL.P2_Fault
29
GVL.ResetPB
GVL.P1_Fault
R
30
GVL.ResetPB
GVL.P2_Fault
R
31
GVL.ResetPB
GVL.Fault
R